GITAM University

Subject-Physics

Topic: Semiconductors : 2

Sayan Chaudhuri

Hall Effect:

If a current carrying conductor is placed in a transverse magnetic field, an electric field is induced in the direction perpendicular to both magnetic field and current.

The produced electric field is called Hall field (E_H)

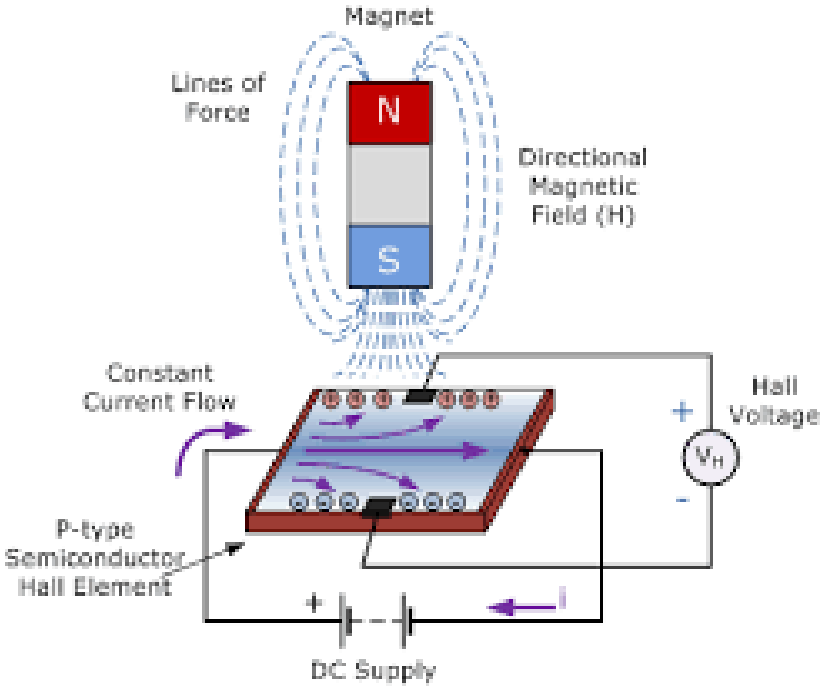

Current I = $nevA$

Force on the electrons at equilibrium,

$$\therefore eE_H = evB$$

But, $E_H = \frac{V_H}{d}$

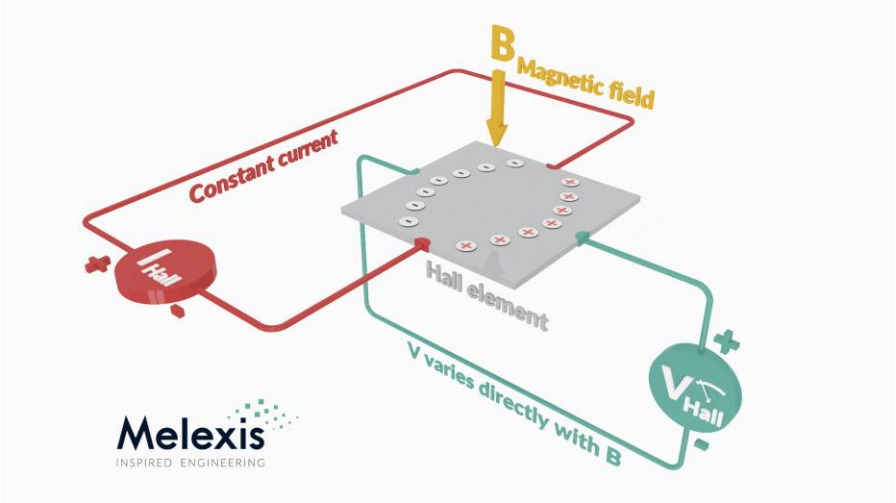

$$\frac{V_H}{d} = vB$$

$$V_H = \frac{BI}{new} = \mathrm{R_H}\frac{\mathrm{BI}}{\mathrm{w}}$$

R_H is called hall coefficient

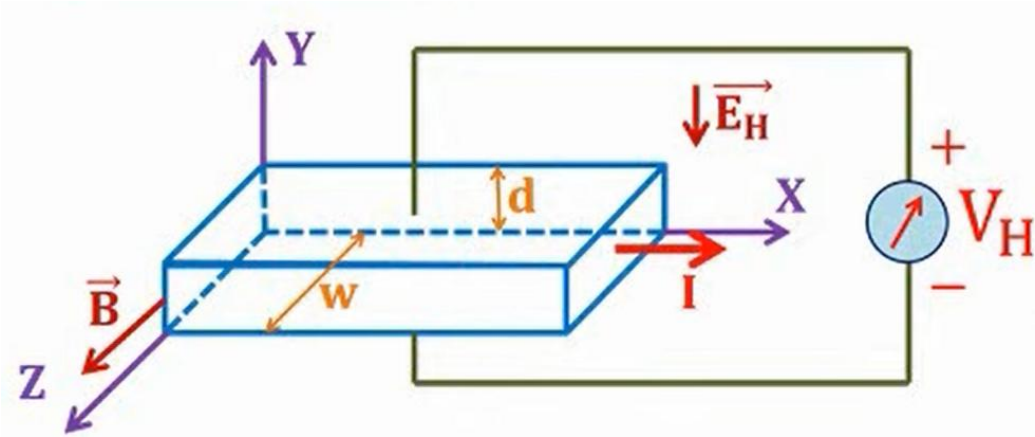

$$R_H = \frac{1}{ne} = \frac{V_H w}{BI} = \frac{V_H w.d}{BI\,.d} = E_H.\frac{A}{BI} = \frac{E_H}{JB}$$

Uses of Hall effect:

- Determining the carrier concentration
- Determining the type of semiconductor
- To calculate the mobility of charge carriers ($\sigma = ne\mu$)

Problems:

- n-type Ge sample has a donor concentration 10^{21} /m^3 and thickness 3 mm used in hall effect experimental set up. If applied field is 0.5 T, J = 500 A/m^2 find the Hall voltage.

$$V_H = \frac{BI}{new} = \frac{BI.d}{new.d} = \frac{BI.d}{neA} = \frac{Bj.d}{ne}$$

- A bar of n-type Ge of size 0.10m X 0.001m X 0.001m is mounted in a magnetic field of 2X20^{-1} T. If 1 mV is applied across the long ends of the bar, calculate the current through the bar and the Hall voltage across the short dimensions of the bar. $\mu_e = 0.39 \frac{m^2}{V.sec}$

$$I = nevA = ne\,(\mu E)(dw) = ne\mu\left(\frac{V}{L}\right)dw$$

Diffusion:

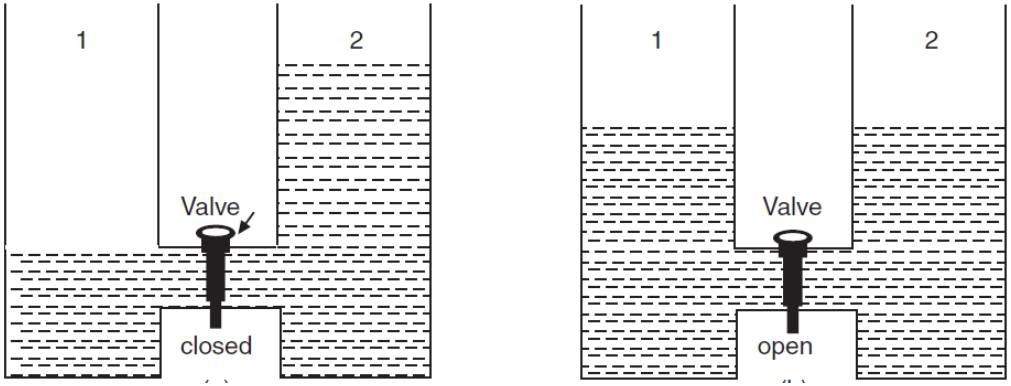

Diffusion
of liquid

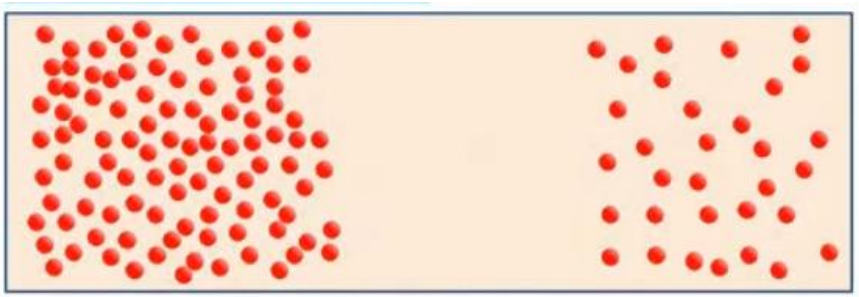

Diffuse of charge carrier

At equilibrium :
Diffusion current = Drift current

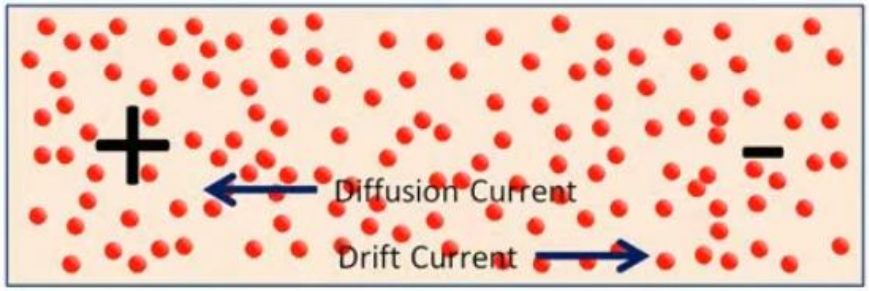

p-n junction Diode:

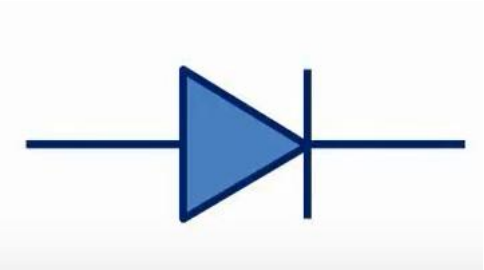

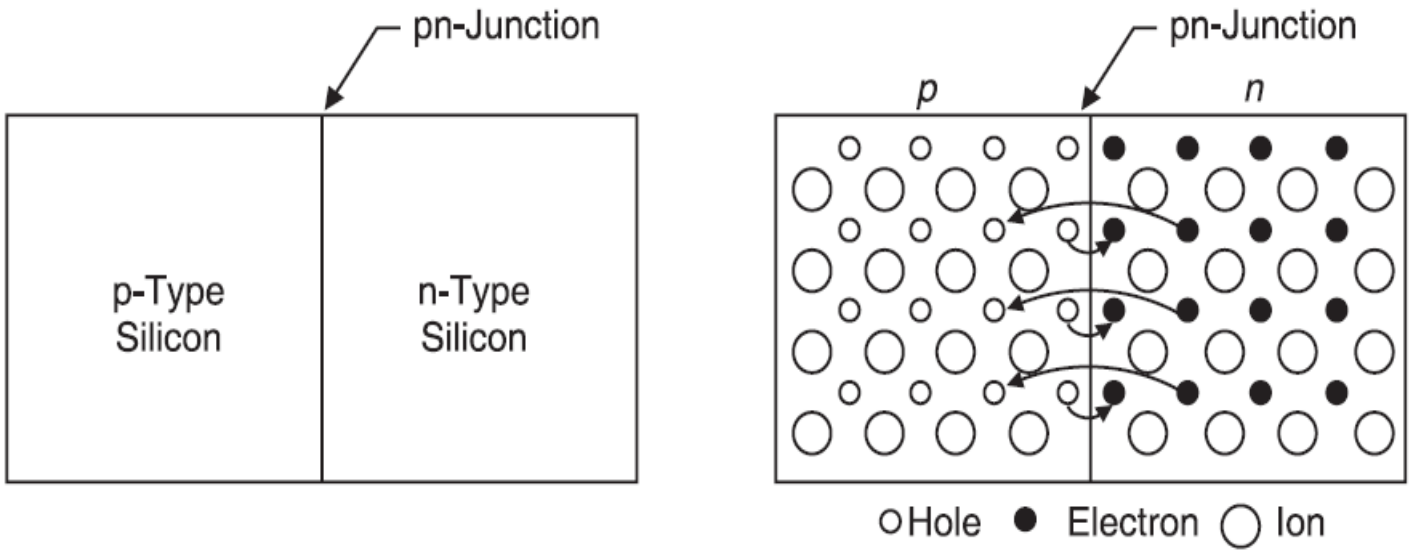

Diffusion of electron and hole

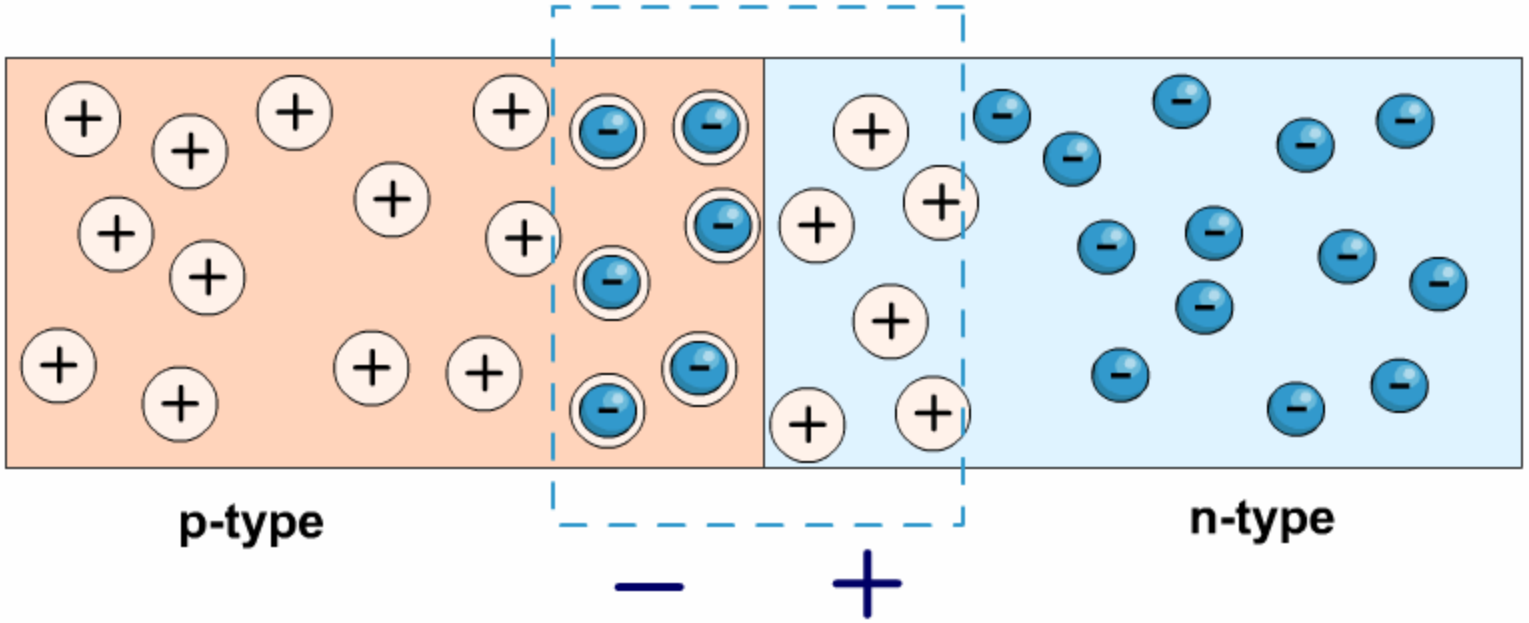

-Semiconductors n-type and p-type are brought together

-Electrons and holes migrate across the junction

-The depletion layer is formed

-A p.d. is set up across the depletion layer

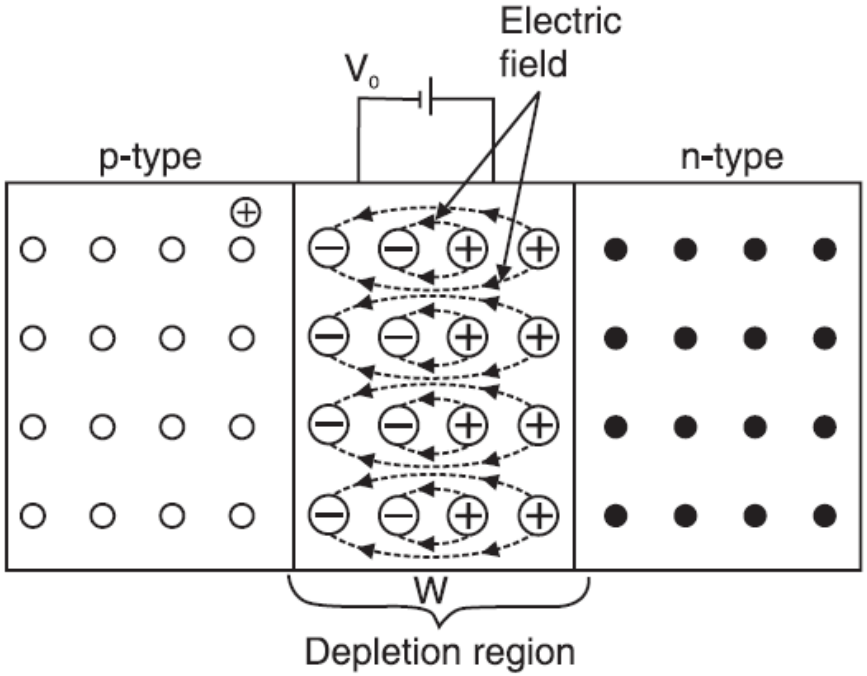

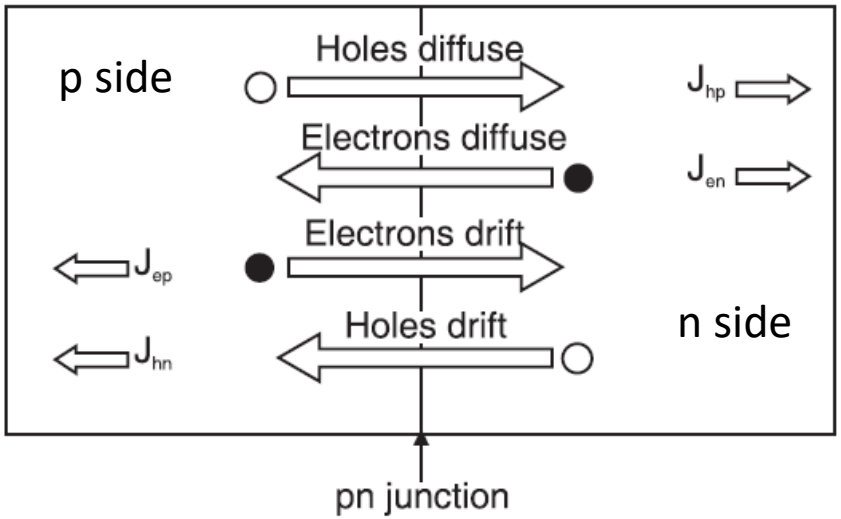

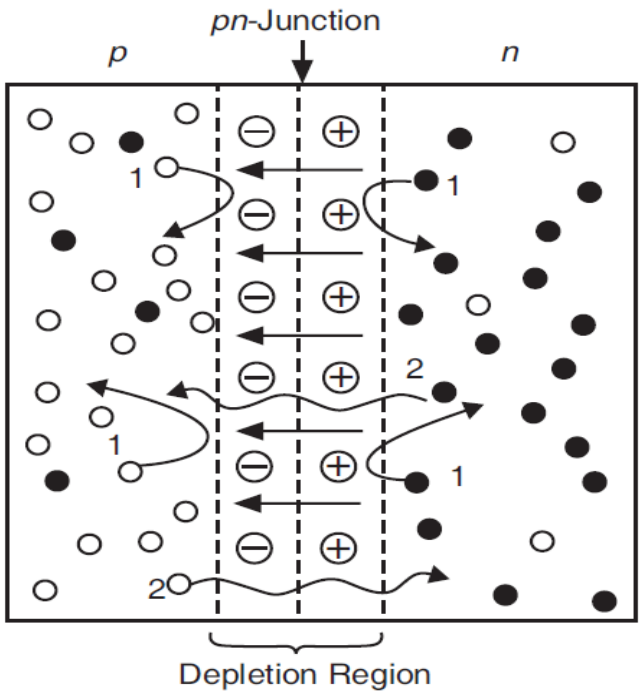

At equilibrium,

J_P (Drift) + J_P (Diffusion) = 0

J_e (Drift) + J_e (Diffusion) = 0

Contact Potential

$$V_0 = \frac{k_B T}{e} \ln\left(\frac{N_a N_d}{n_i^2}\right)$$

Depletion region

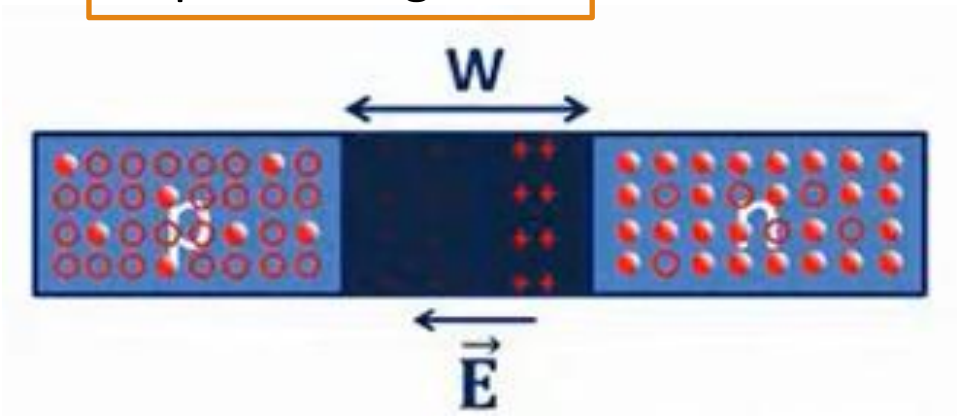

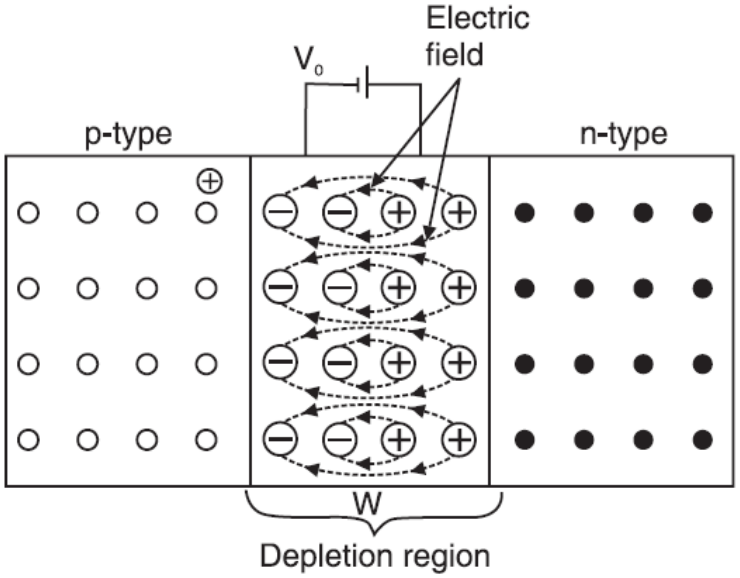

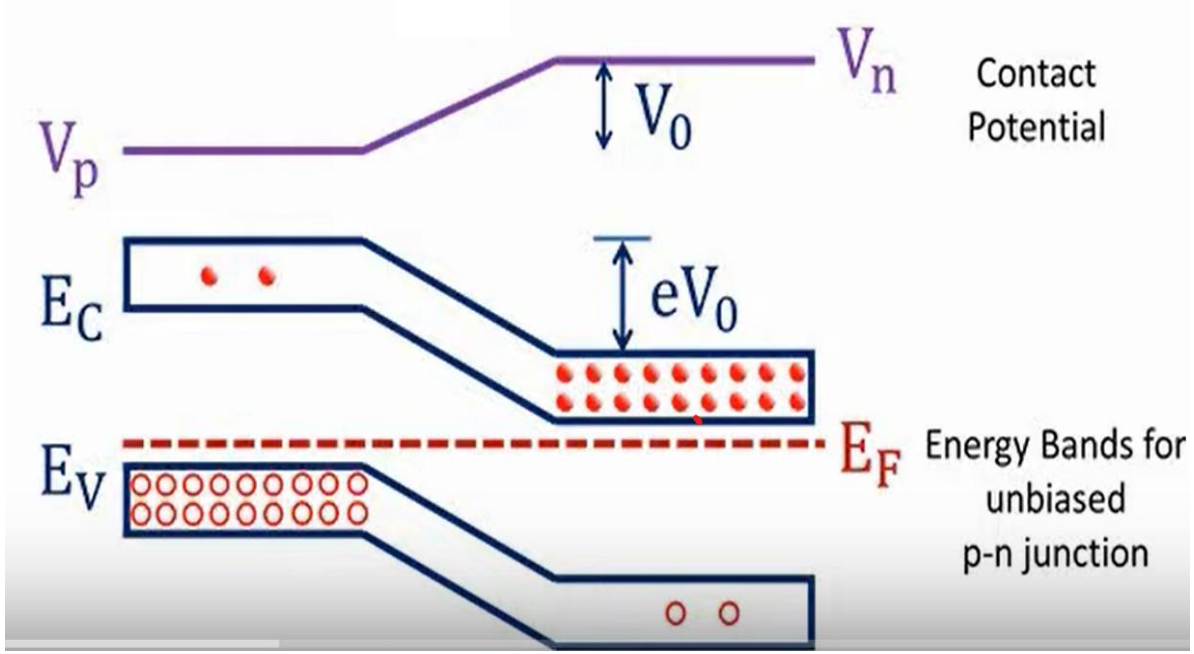

Forward Bias Condition:

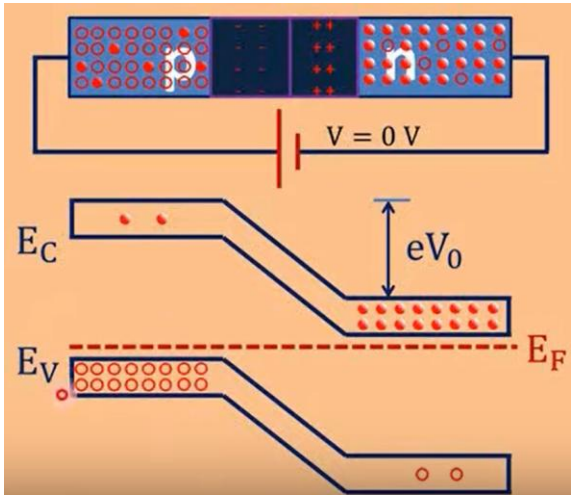

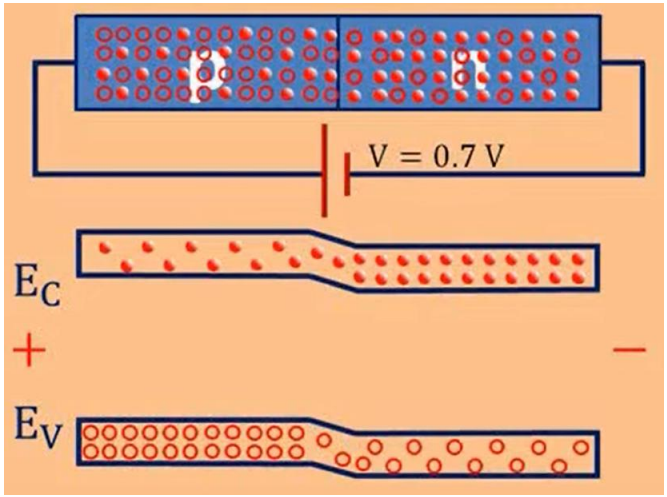

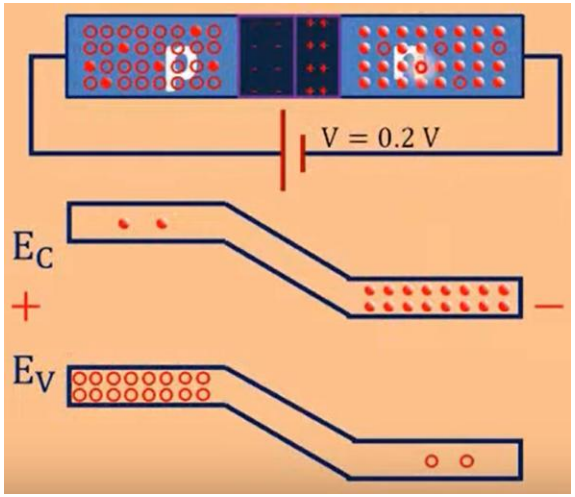

- As forward bias voltage increase → Depletion layer decrease
- When forward bias voltage = barrier Voltage
  Majority carrier crosses the junction

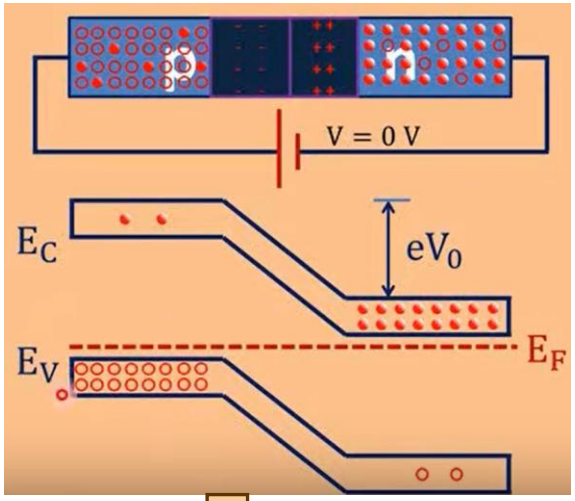
V = 0 V
E_C
eV_0
E_V
E_F

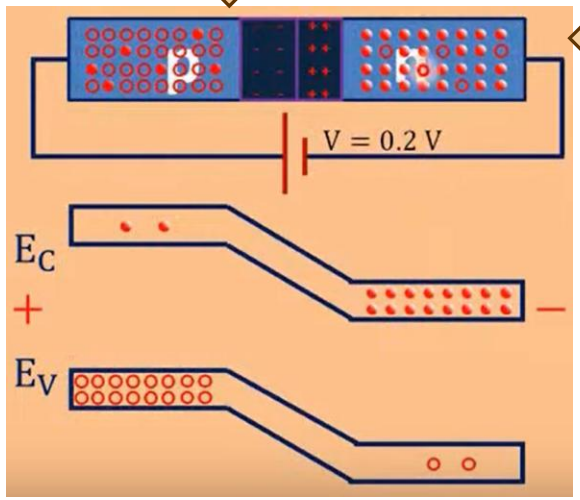
V = 0.2 V
E_C
+
−
E_V

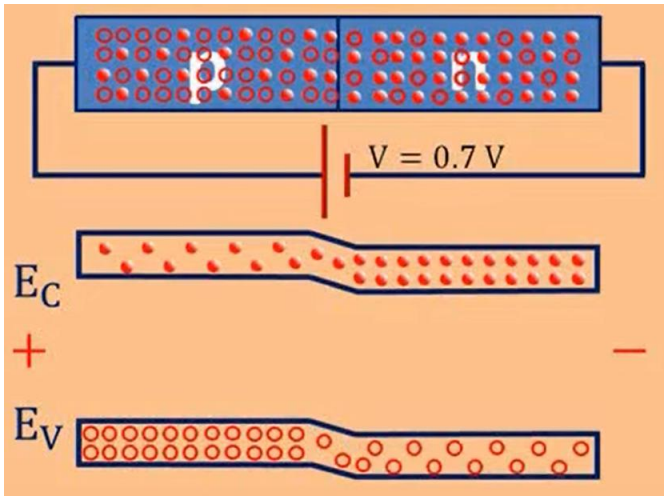
V = 0.7 V
E_C
+
−
E_V

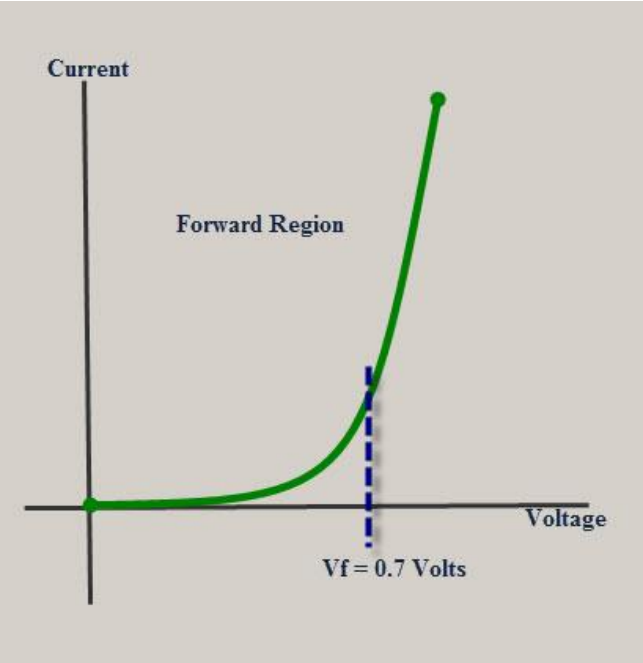
Current
Forward Region
Voltage
Vf = 0.7 Volts

Reverse Bias Condition:

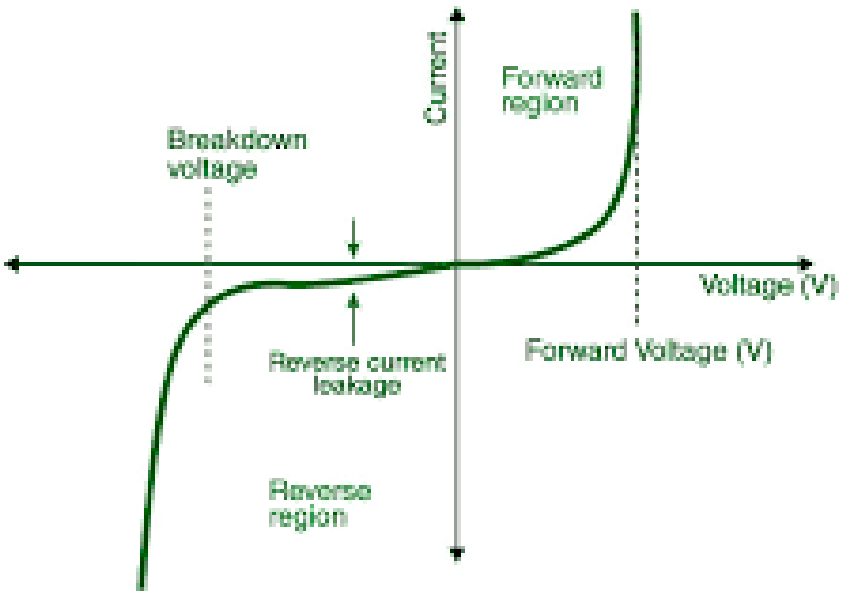

- As Reverse bias voltage increase → Depletion layer increases : Majority carriers can not cross the barrier.
- Small current due to minority carriers

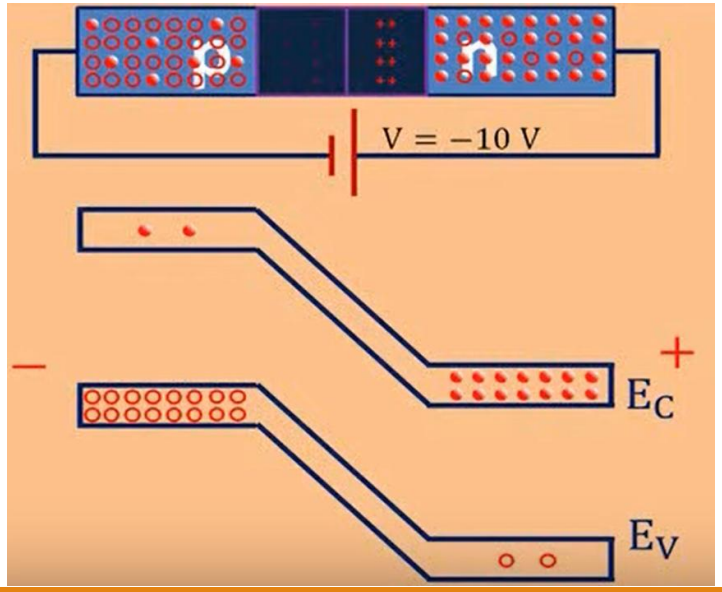

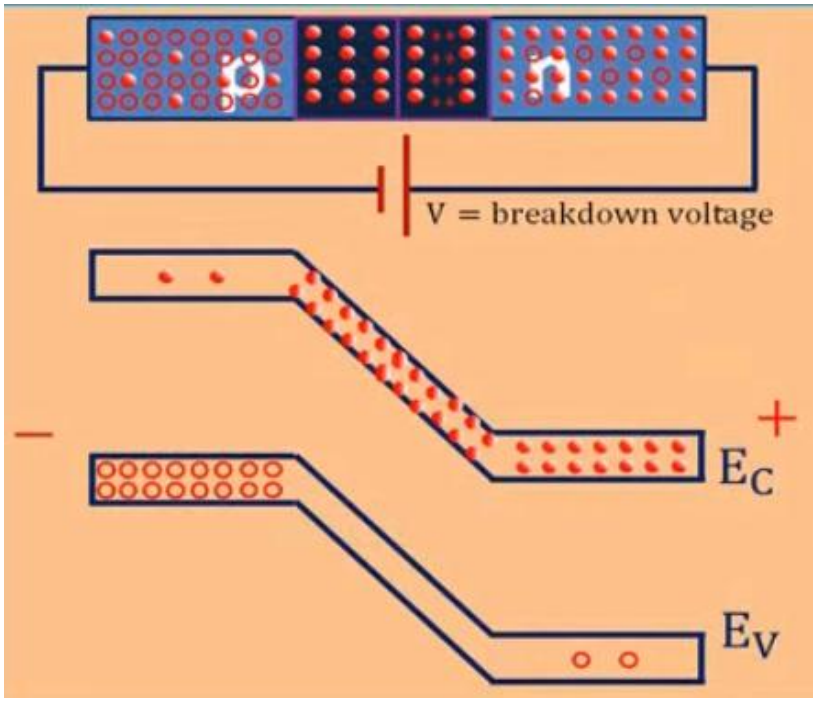

Reverse Breakdown

Avalanche Breakdown: in a Lightly doped pn junction.

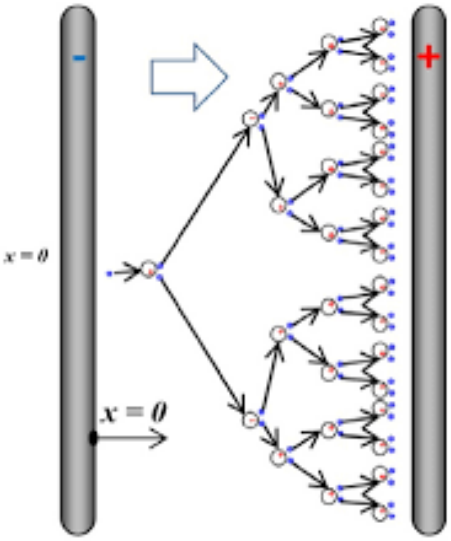

Avalanche Breakdown

Zener Breakdown: In a highly doped pn junction

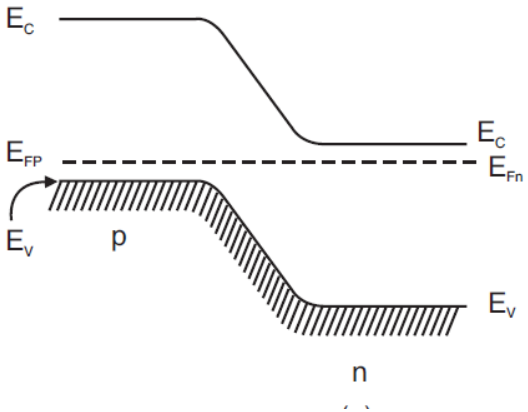

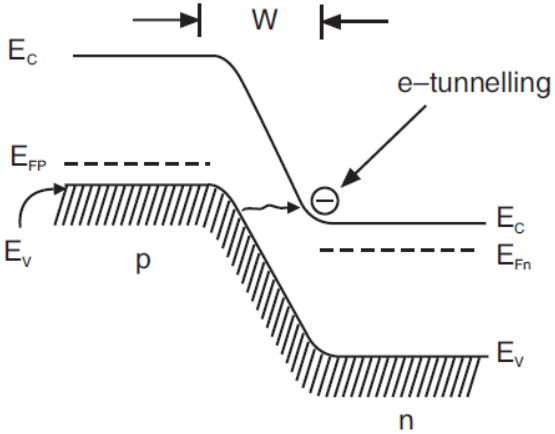

Electron tunneling

Avalanche Breakdown:

- If reverse bias voltage is very high depletion region widens and V_0 very strong.
- Minority carriers get accelerated in the depletion region, once field is very strong , they can knock off negative ions.
- The freed electrons ca further knockoff other electrons and large number of electrons are generated.
- Non-reversible process due to ionization

Zener Breakdown:

- Only happens when doping concentration is extremely high
- V_0 is very strong but depletion region is very thin.
- Quantum tunnelling effect
- Less ionization produces less heat.

Half wave rectifier

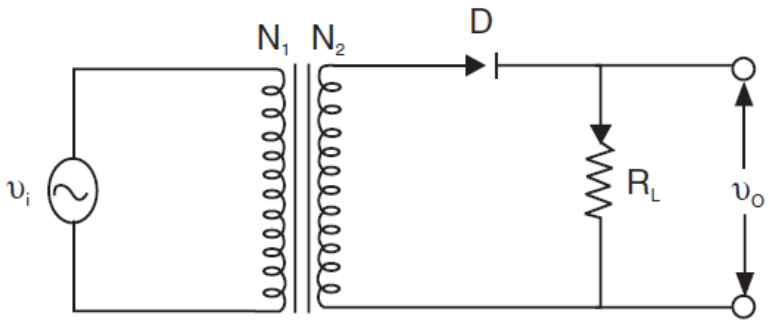

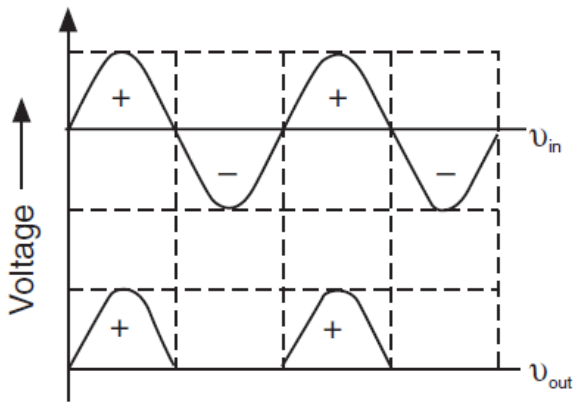

Full wave rectifier

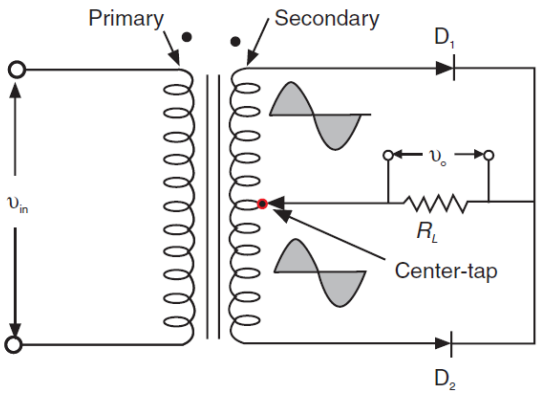

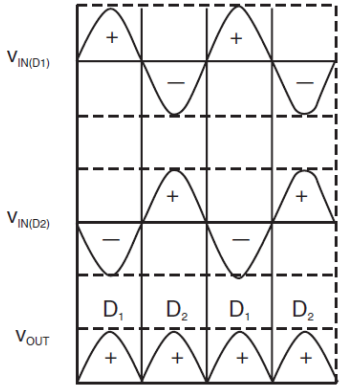

AC to DC Converter

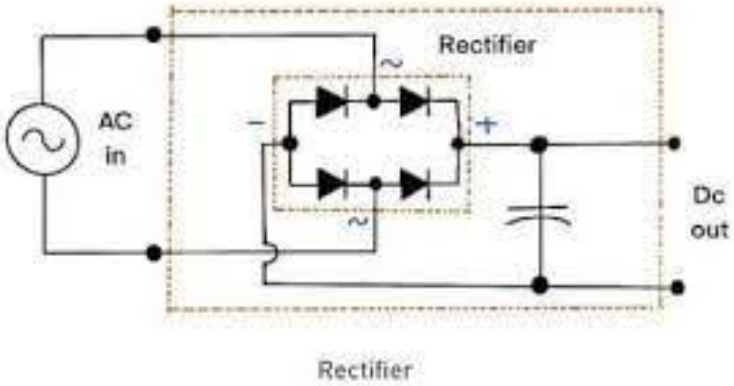

Zener Diode:

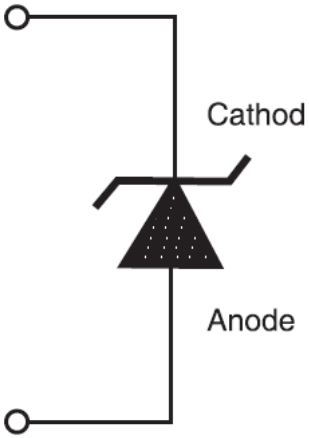

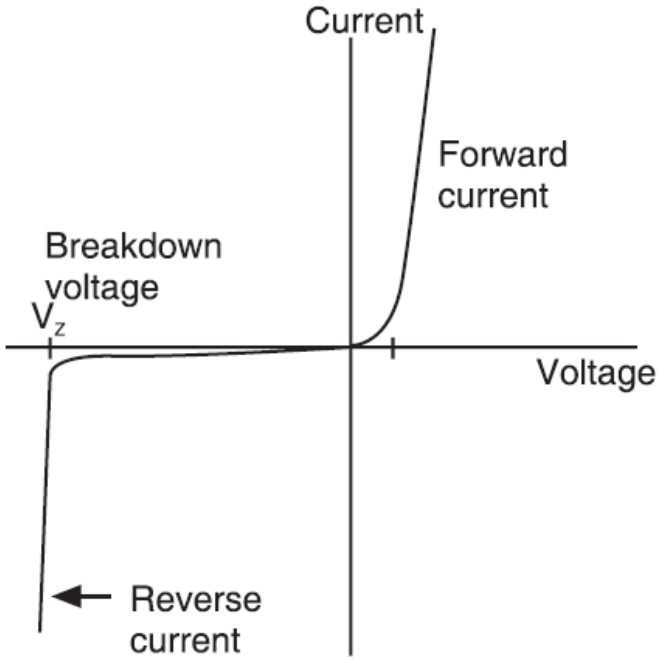

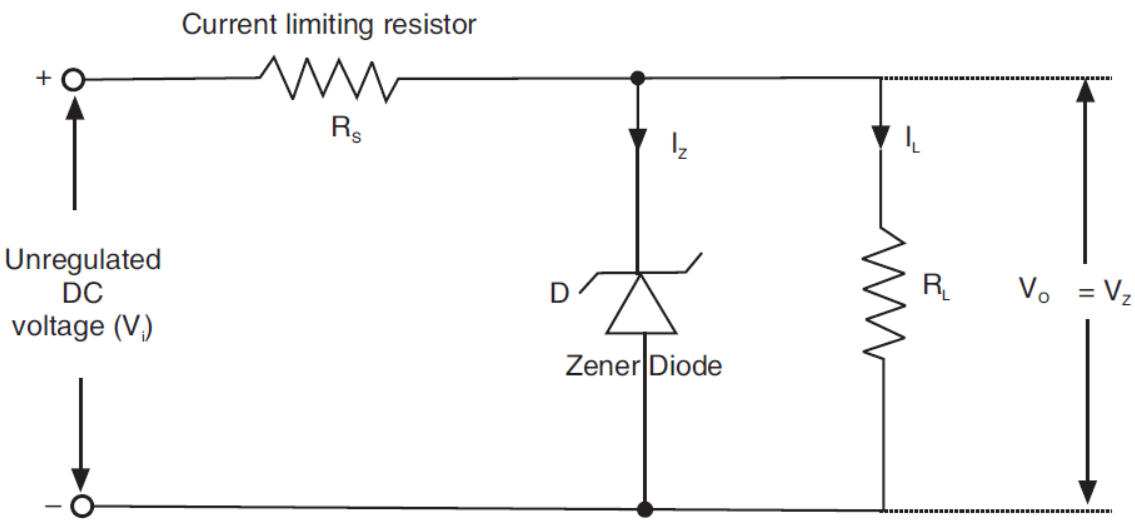

Applications:

Voltage regulators
Meter protection etc

Tunnel Diode:

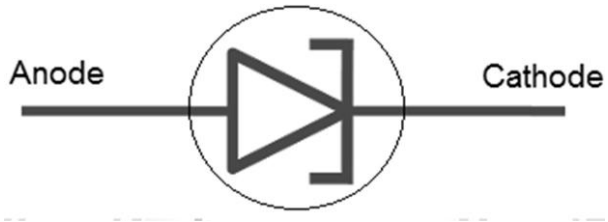

The concentration of impurities in a tunnel diode is 1000 times greater than that of a normal p-n junction diode.
The depletion layer is very thin.

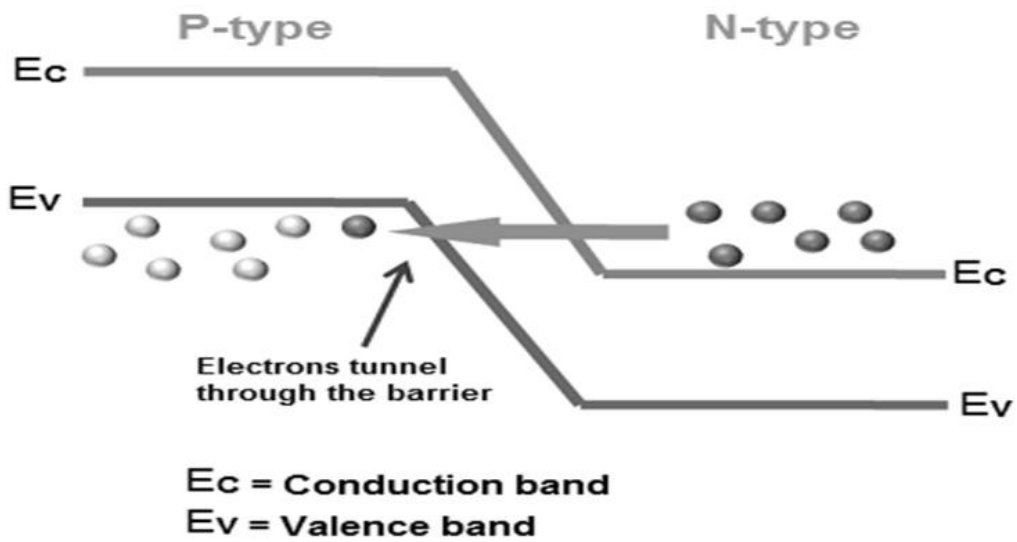

Unbiased tunnel diode

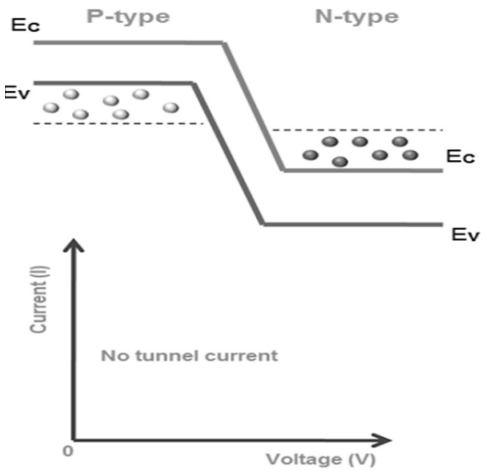

Small voltage applied to the tunnel diode

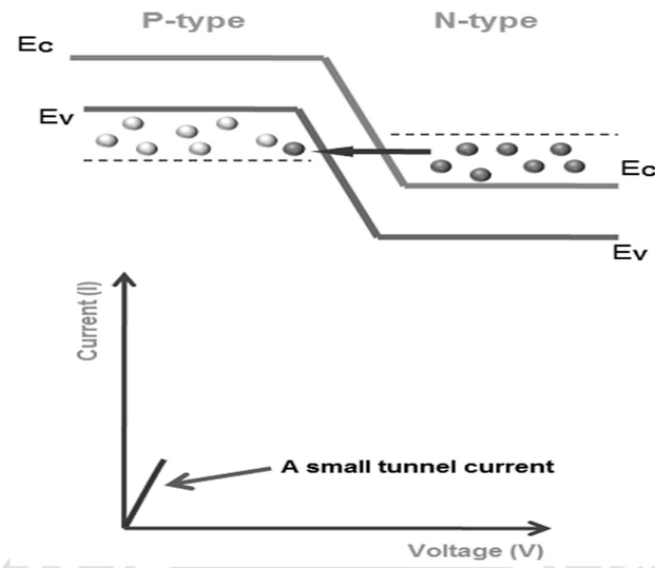

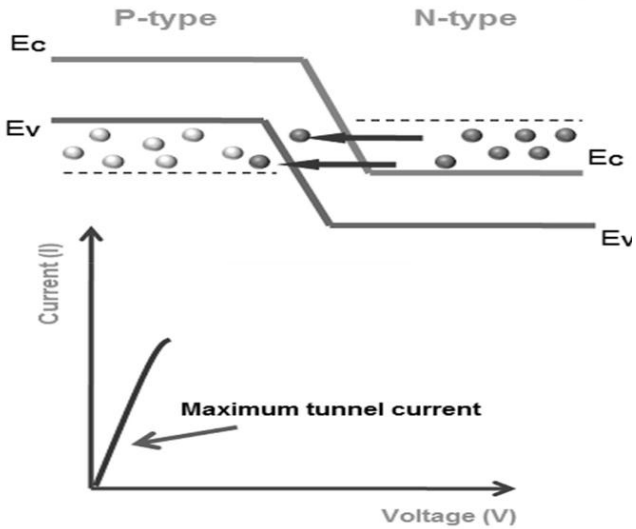

Applied voltage is slightly increased

Applied voltage is further increased

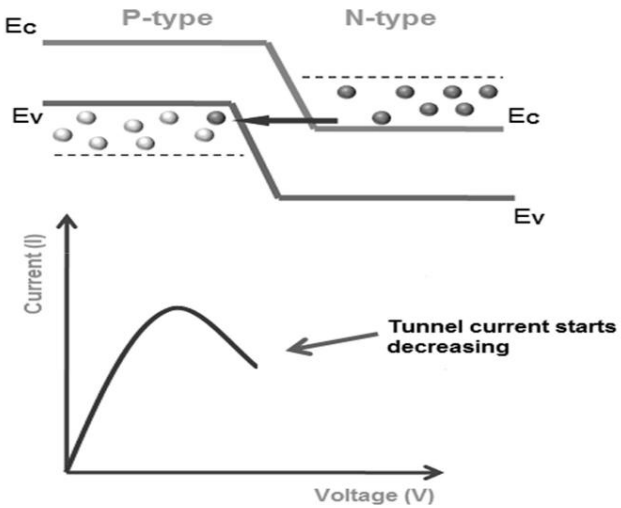

Applied voltage is largely increased

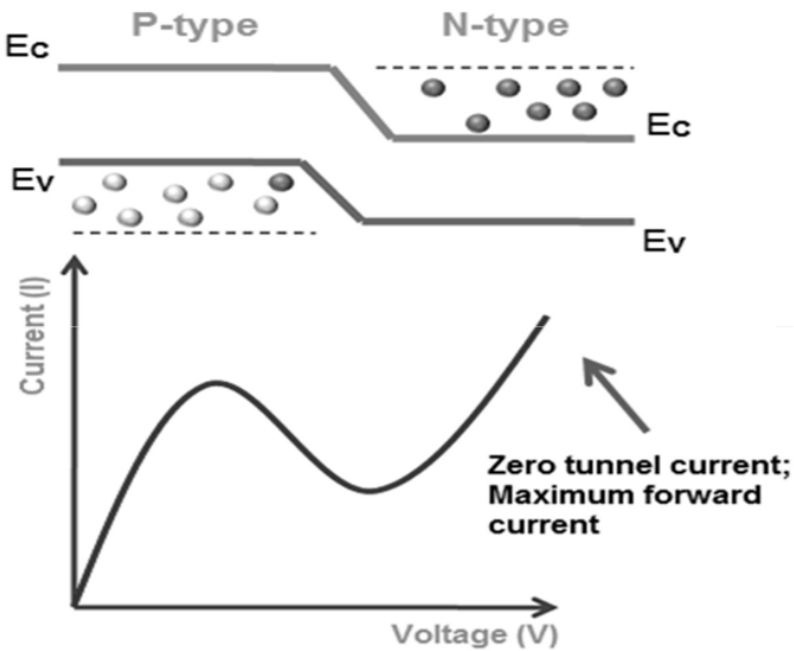

Applications of tunnel diodes

- Tunnel diodes are used as logic memory storage devices.
- Tunnel diodes are used in relaxation oscillator circuits.
- Tunnel diode is used as an ultra high-speed switch.

Light emitting Diode:

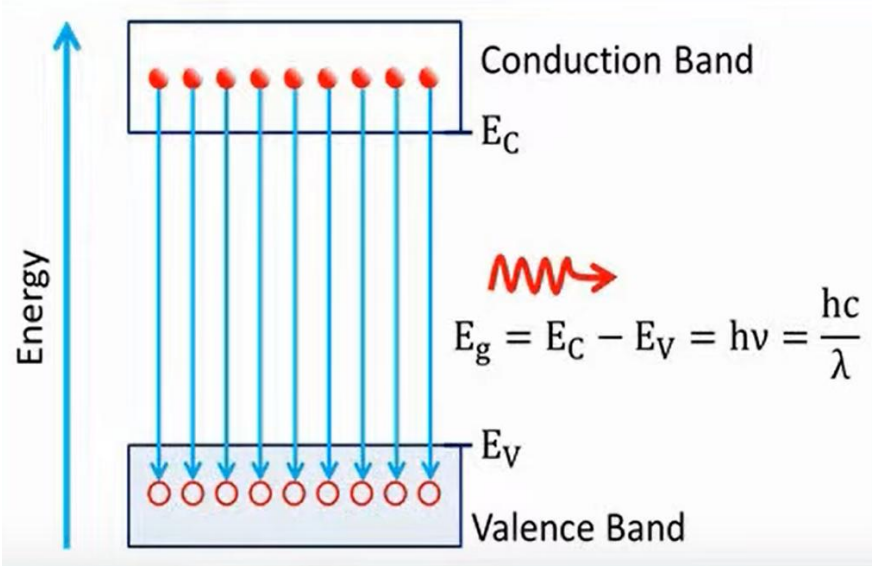

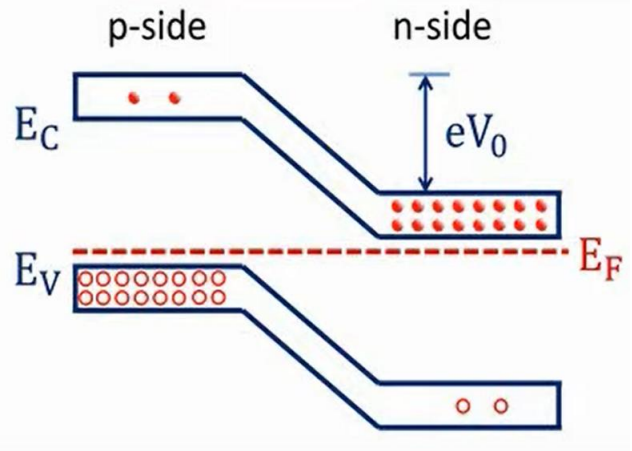

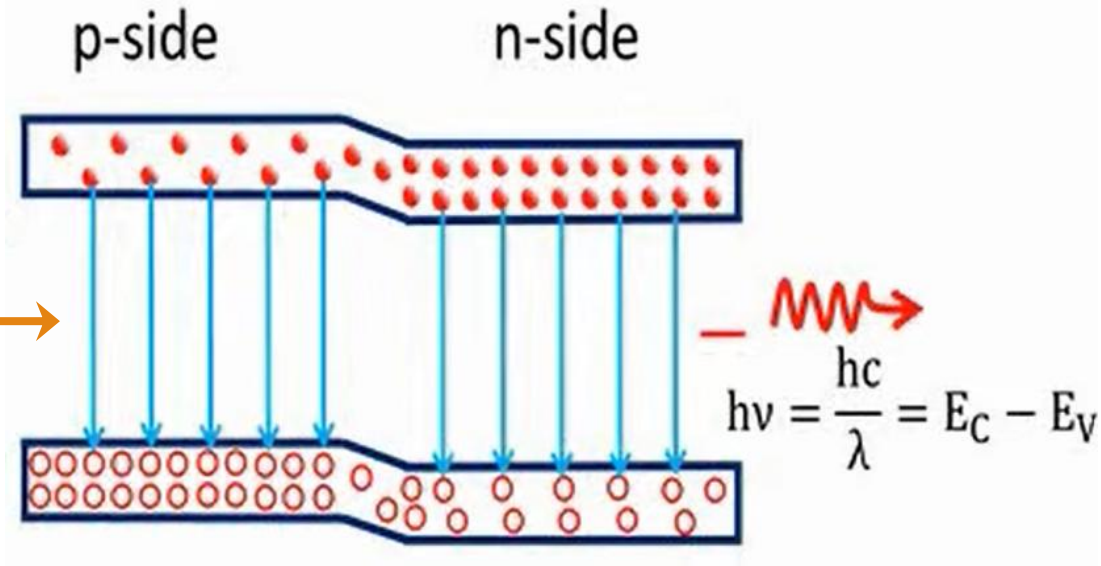

Si and Ge are not used in LED.
E_g for Si = 1.12 eV, Ge = 0.7 eV, the $\lambda = \frac{hc}{E_g} = \frac{1.24}{E_g}\ \mu m$ does not fall in the visible region.

GaAs, GaAsP, and GaP are used for LED purpose. (mixing group 3 and group 5 elements.)

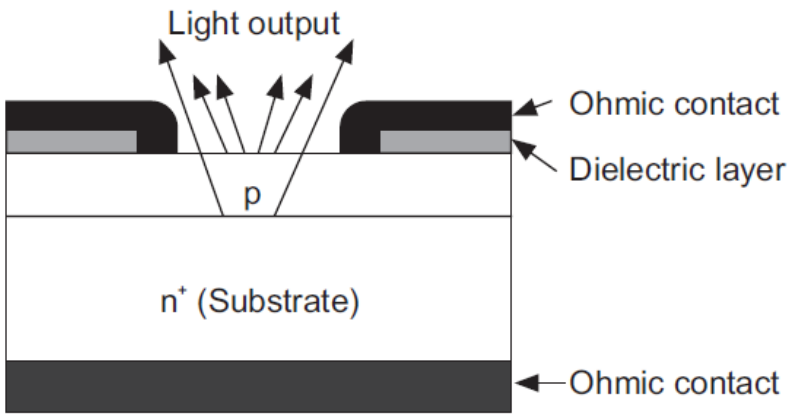

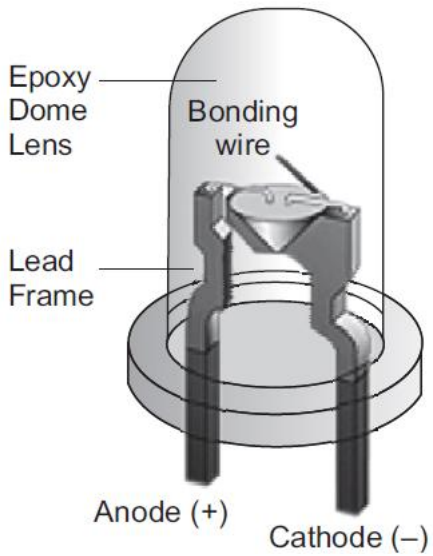

Why Si or Ge diode can not be used as LED:

E_g for Si and Ge are 1.1 eV and 0.7 eV.

Corresponding λ does not fall in visible region.

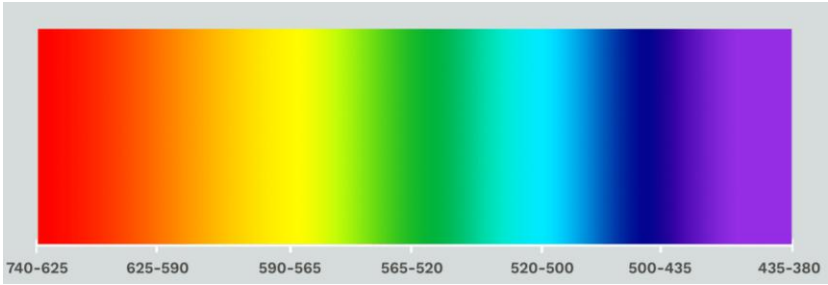

Typical LED Characteristics			
Semiconductor Material	Wavelength	Colour	V_F @ 20mA
GaAs	850-940nm	Infra-Red	1.2v
GaAsP	630-660nm	Red	1.8v
GaAsP	605-620nm	Amber	2.0v
GaAsP:N	585-595nm	Yellow	2.2v
AlGaP	550-570nm	Green	3.5v
SiC	430-505nm	Blue	3.6v
GaInN	450nm	White	4.0v

Solar cell

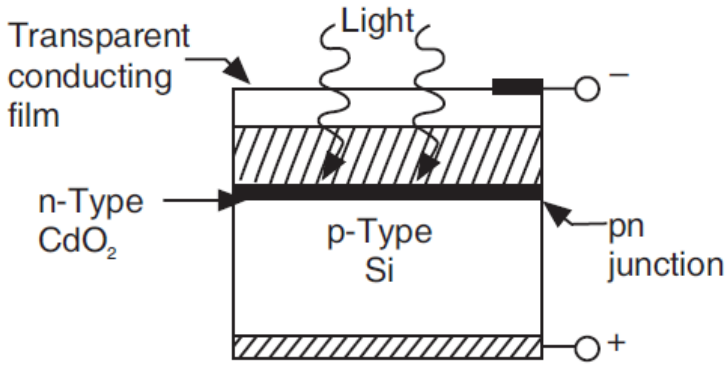
Transparent conducting film
Light
n-Type CdO_2
p-Type Si
pn junction
−
+

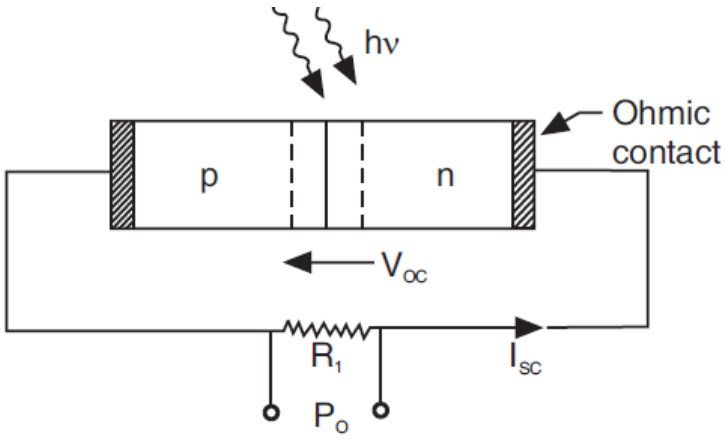
hν
Ohmic contact
p
n
V_{oc}
R_1
I_{sc}
P_o

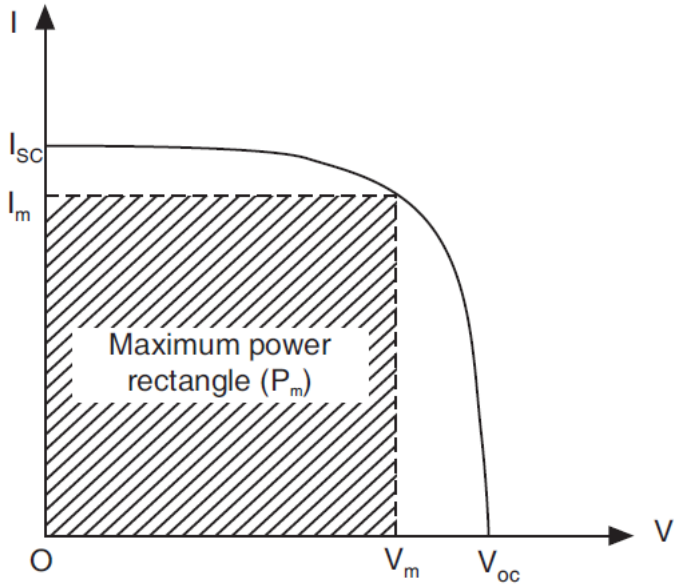
I
I_{sc}
I_m
Maximum power rectangle (P_m)
O
V_m
V_{oc}
V

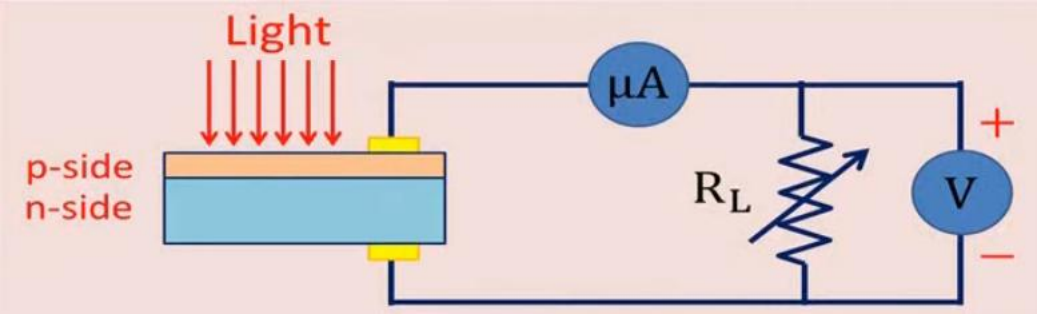
Light
p-side
n-side
μA
R_L
V
+
−

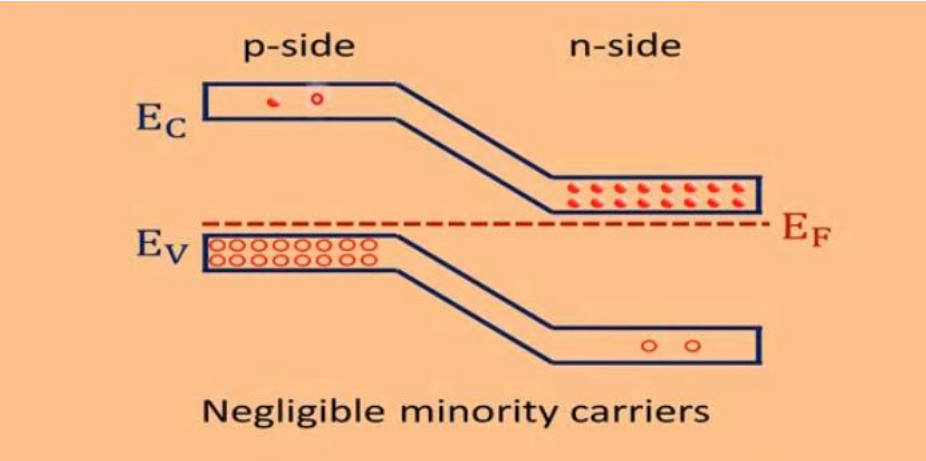
p-side
n-side
E_C
E_V
E_F
Negligible minority carriers

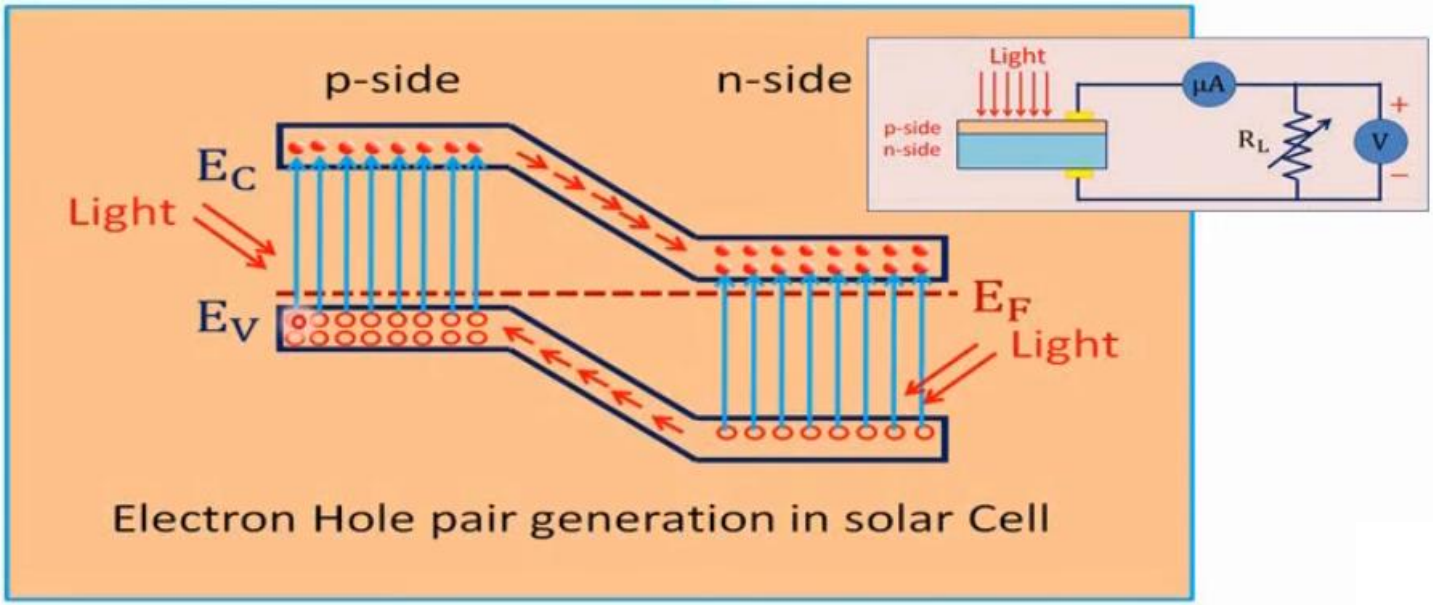
p-side
n-side
E_C
Light
E_V
E_F
Light
Light
μA
p-side
n-side
R_L
V
+
−
Electron Hole pair generation in solar Cell

Solar Cells are used in a wide variety of applications

- Toys, watches, calculators
- Electric fences
- Remote lighting systems
- Water pumping
- Water treatment
- Emergency power
- Portable power supplies
- Satellites

Drawbacks:

1. Initial cost is high
2. Large area required
3. Inefficient in cloudy weather

Photodiode:

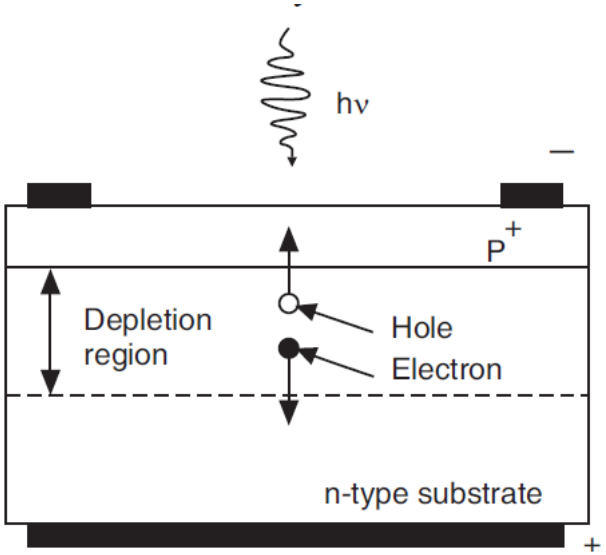

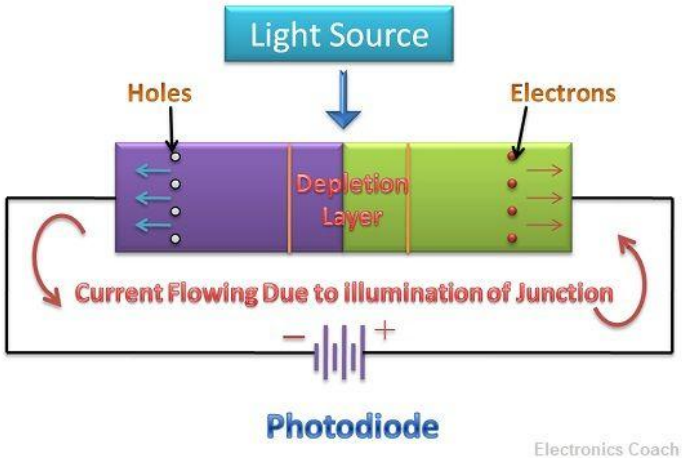

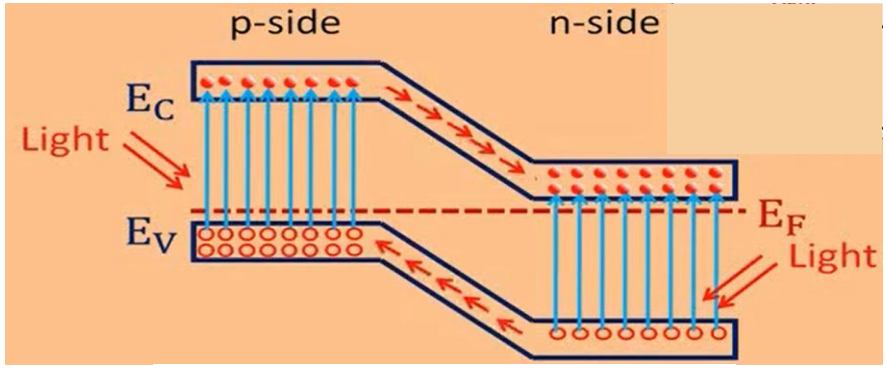

photoconductive mode: for external short circuit

Photovoltaic mode: for open circuit

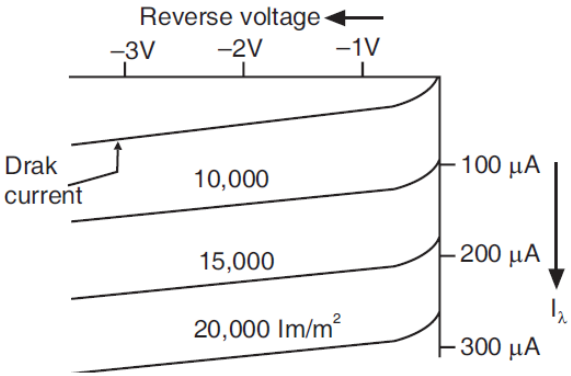

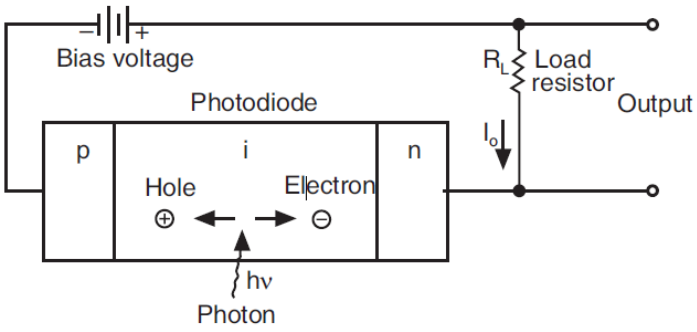

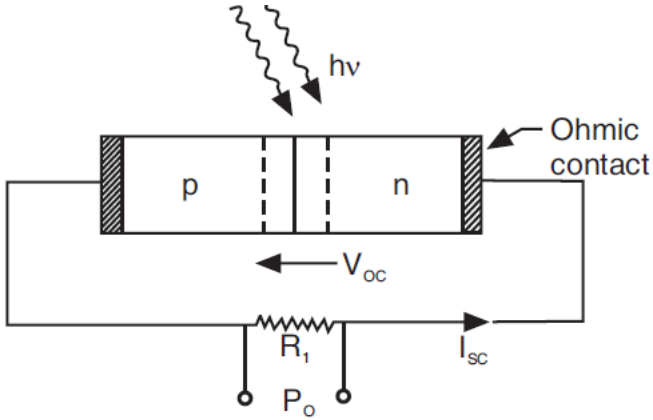

Photodiode	Solar Cell
A photodiode converts light into electricity by generating a current when photons hit its surface.	A solar cell generates an electric current directly from sunlight with no need for an external source of power.
Photodiodes can be found inside digital cameras and photocopiers.	Solar cells are used to convert sunlight into electricity for homes and businesses.
Photodiodes have a specific wavelength region where they will absorb photons.	Solar cells have a wide absorption spectrum that ranges from UV to infrared light wavelengths.
A photodiode can be used as an amplifier or as part of a circuit with other components.	A solar cell can only be used in conjunction with other devices and cannot function alone.
The photodiode contains one p-n junction.	A solar cell contains multiple p-n junctions.

The quantum efficiency, $\eta = \frac{number\ of\ electron-hole\ pair}{number\ of\ incident\ photons} = \frac{I_l/q}{P_0}$

Responsivity, $\zeta = \frac{I_L}{P_0}$, P_0 is the power of the optical photocurrent

$$\zeta = \frac{\eta q}{h\nu} = \frac{\eta\lambda}{1.24}\ (\lambda\ in\ \mu m)$$

The maximum photocurrent in a photodiode, $I_{L(max)} = \frac{q}{h\nu} P_0$

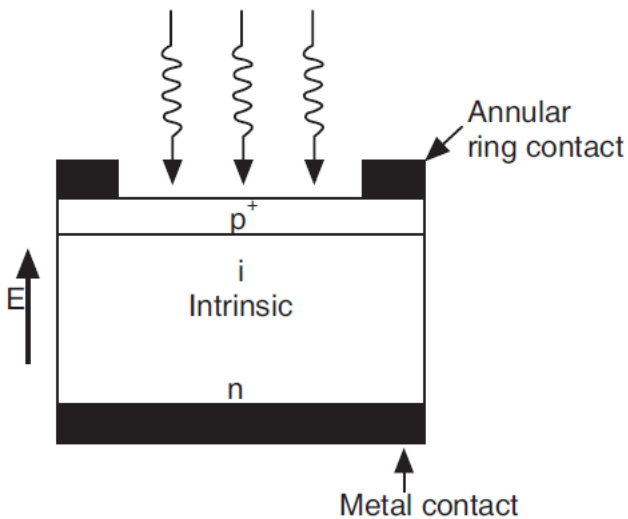

P i n diode

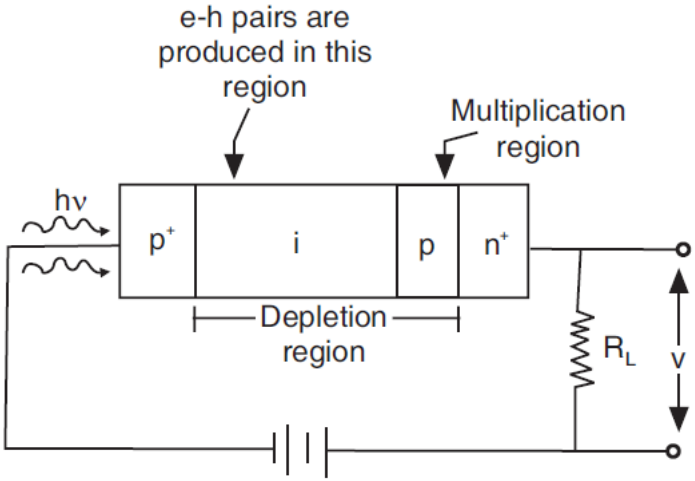

Avalanche photo diode